SIEMENS

Data sheet 3RV1917-7B

Mounting rail 45 mm for mounting on 3-phase busbars 3RV2917-1/4

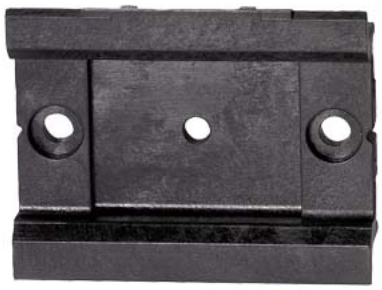

product category	Infeed systems
product designation	Mounting rail
product type designation	3RV19
suitability for use	circuit-breakers 3RV2
General technical data	
size of the circuit-breaker	S00, S0
Substance Prohibitance (Date)	07/01/2006
Weight	0.015 kg
Short-circuit protection	
short-circuit rating	see table in the operating instructions
Installation/ mounting/ dimensions	
fastening method	screw fixing
Approvals Certificates	

General Product Approval			Test Certificates	Maritime application	
CE EG-Konf.	UK CA	EAC	Special Test Certificate	ABS	BUREAU VERITAS

Maritime application			other		Environment
DNV	PRS	RMRS	Confirmation	VDE	Environmental Confirmations

Further information

Information on the packaging
https://support.industry.siemens.com/cs/ww/en/view/109813875
Information- and Downloadcenter (Catalogs, Brochures,…)
https://www.siemens.com/ic10
Industry Mall (Online ordering system)
https://mall.industry.siemens.com/mall/en/en/Catalog/product?mlfb=3RV1917-7B
Cax online generator
http://support.automation.siemens.com/WW/CAXorder/default.aspx?lang=en&mlfb=3RV1917-7B
Service&Support (Manuals, Certificates, Characteristics, FAQs,...)
https://support.industry.siemens.com/cs/ww/en/ps/3RV1917-7B
Image database (product images, 2D dimension drawings, 3D models, device circuit diagrams, EPLAN macros, ...)
http://www.automation.siemens.com/bilddb/cax_de.aspx?mlfb=3RV1917-7B&lang=en

Subject to change without notice
© Copyright Siemens

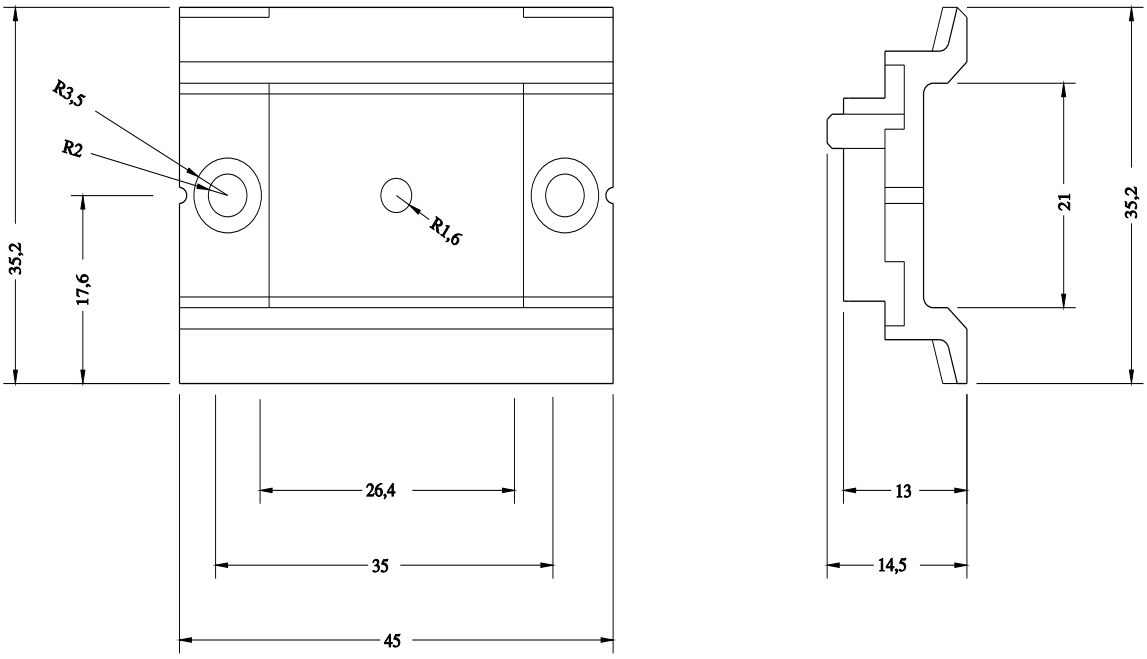

last modified: 6/30/2025

Subject to change without notice
© Copyright Siemens