SIEMENS

Data sheet 3RV1927-5A

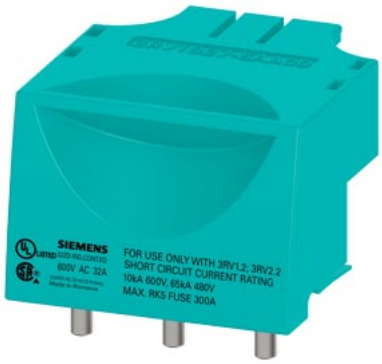

cable connector for circuit breaker size S0 with screw terminal multi-unit packaging 10 units

product brand name	SIRIUS
product category	Infeed systems
product designation	Connection plug
product type designation	3RV19
suitability for use	circuit-breakers 3RV2
General technical data	
size of the circuit-breaker	S0
power loss [W] for rated value of the current at AC in hot operating state per pole	1.6 W
type of calculation of power loss depending on pole	quadratic
protection class IP on the front according to IEC 60529	IP20
thermal current	32 A
Substance Prohibitance (Date)	07/01/2006
Weight	0.039 kg
number of poles for main current circuit	3
operating voltage at AC rated value	690 V
operational current rated value	32 A
UL/CSA ratings	
operating voltage at AC according to UL rated value	600 V
Ambient conditions	
ambient temperature during operation	-20 ... +60 °C
Environmental footprint	
Environmental Product Declaration(EPD)	Yes
global warming potential [CO2 eq] total	9.06 kg
global warming potential [CO2 eq] during manufacturing	0.313 kg
global warming potential [CO2 eq] during operation	8.72 kg
global warming potential [CO2 eq] after end of life	0.022 kg
Electrical Safety	
protection class IP on the front according to IEC 60529	IP20
touch protection on the front according to IEC 60529	finger-safe, for vertical contact from the front
Short-circuit protection	
short-circuit rating	see table in the operating instructions
Installation/ mounting/ dimensions	
mounting position	any
fastening method	screw connection in the circuit breaker, pluggable in the infeed system with spring-loaded mechanism
height	42 mm
width	44.8 mm
depth	54 mm
Connections/ Terminals	

Subject to change without notice
© Copyright Siemens

type of electrical connection for main current circuit	screw-type terminals

Approvals Certificates

General Product Approval				Test Certificates	
EG-Konf.		UL		Special Test Certificate	Type Test Certificates/Test Report

Maritime application		other		Environment	
ABS	BUREAU VERITAS	Confirmation	VDE	EPD	Environmental Confirmations

Further information

Information on the packaging
https://support.industry.siemens.com/cs/ww/en/view/109813875
Information- and Downloadcenter (Catalogs, Brochures,…)
https://www.siemens.com/ic10
Industry Mall (Online ordering system)
https://mall.industry.siemens.com/mall/en/en/Catalog/product?mlfb=3RV1927-5A
Cax online generator
http://support.automation.siemens.com/WW/CAXorder/default.aspx?lang=en&mlfb=3RV1927-5A
Service&Support (Manuals, Certificates, Characteristics, FAQs,...)
https://support.industry.siemens.com/cs/ww/en/ps/3RV1927-5A
Image database (product images, 2D dimension drawings, 3D models, device circuit diagrams, EPLAN macros, ...)
http://www.automation.siemens.com/bilddb/cax_de.aspx?mlfb=3RV1927-5A&lang=en

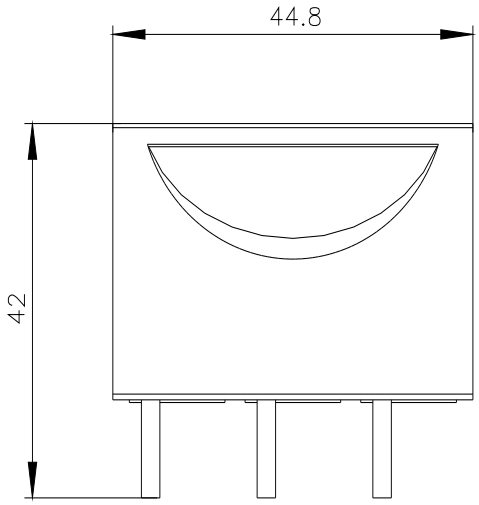

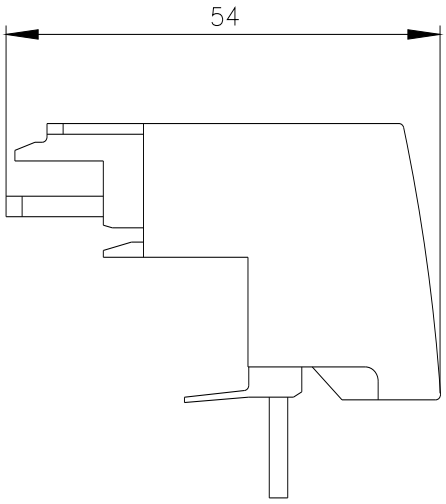

last modified: 6/30/2025

Subject to change without notice
© Copyright Siemens