Trusted. Tested. Tough.®

SECTION: 2.20.070
FM2793
1024
Supersedes
0324

MAIL TO: P.O. BOX 16347 • Louisville, KY 40256-0347
SHIP TO: 3649 Cane Run Road • Louisville, KY 40211-1961
Tel: (502) 778-2731 • 1 (800) 928-PUMP

Visit our website:
zoellerpumps.com

Product information presented here reflects conditions at time of publication. Consult factory regarding discrepancies or inconsistencies.

TECHNICAL DATA SHEET

WASTE-MATE SERIES
Models 4404, 4405 Submersible Sewage Pumps

PRODUCT SPECIFICATIONS

MOTOR	Horse Power	2 (4404) or 3 (4405)
	Voltage	200-230 Single Phase, 230/460 Three Phase
	Phase	1 or 3 Ph
	Hertz	60 Hz
	RPM	1750
	Type	Permanent split capacitor or 3 Ph
	Insulation	Class B
	Amps	5.2-18.0
PUMP	Operation	Automatic or nonautomatic
	Discharge Size	4" horizontal ANSI flange
	Solids Handling	3" (76 mm) spherical solids
	Cord Length	20' (6 m) standard
	Cord Type	1 Ph-UL listed 3-wire neoprene cord and plug 3 Ph-4-wire with no plug
	Max. Head	38' (11.6 m)
	Max. Flow Rate	361 GPM (1367 LPM)
	Max. Operating Temp.	130 °F (54 °C)
	Cooling	Oil filled
	Motor Protection	Auto reset thermal overload (1 Ph)
MATERIALS	Upper Bearing	Ball bearing
	Lower Bearing	Ball bearing
	Mechanical Seals	Carbon and ceramic
	Impeller Type	Non-clogging vortex
	Impeller	Cast iron
	Hardware	Stainless steel
	Motor Shaft	Double seal rotors are 416 stainless steel*
	Gasket	Neoprene square ring and gasket

NOTE: The sizing of effluent systems normally requires variable level float(s) controls and properly sized basins to achieve required pumping cycles or dosing timers with nonautomatic pumps.

DOUBLE SEAL

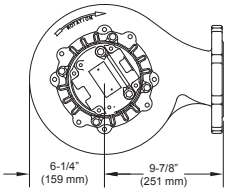

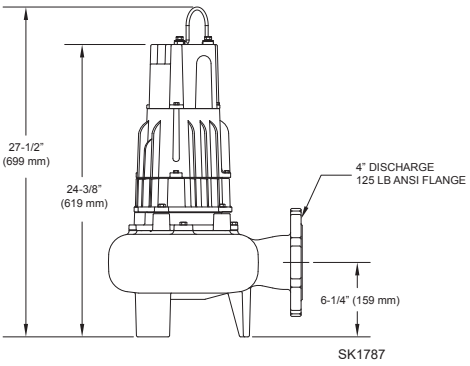

© Copyright 2024 Zoeller® Co. All rights reserved.

TOTAL DYNAMIC HEAD FLOW PER MINUTE

MODEL		4404		4405	
Feet	Meters	Gal.	Liters	Gal.	Liters
5	1.5	300	1136	361	1367
10	3.0	265	1003	326	1234
15	4.6	224	848	284	1075
20	6.1	184	698	241	912
25	7.6	134	503	197	746
30	9.1	60	227	134	507
35	10.7	--	--	50	189
Shut-off Head:		33 ft.(10.1m)		38 ft.(11.6m)	

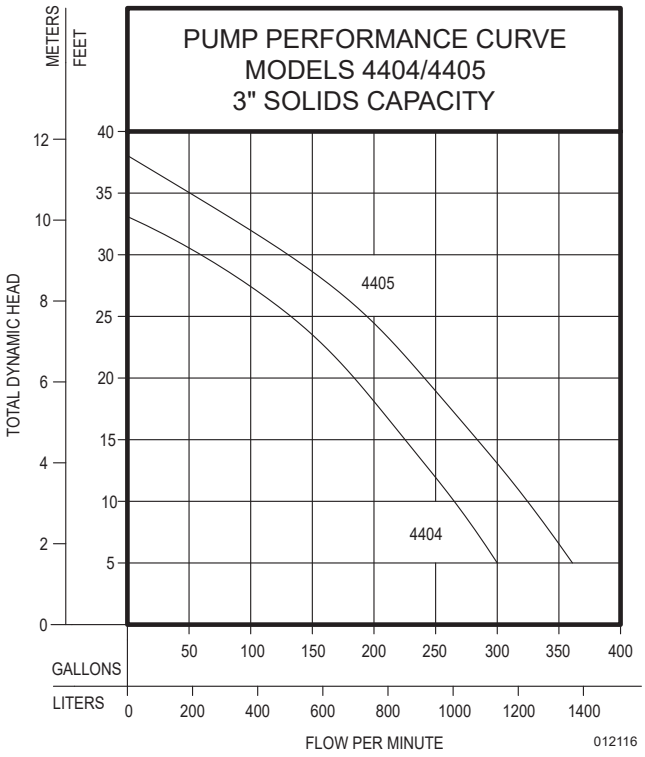

Model	MODEL COMPARISON											
	Seal	Mode	Volts	Ph	Amps	HP	Hz	Lbs	Kg	Simplex	Duplex	Certifications
EI4404	Double	Non	200-230	1	12.9	2	60	147	66	1 or 2	2	cCSAus
WDH4404	Double	Auto	200-230	1	12.9	2	60	150	68	--	---	cCSAus
F4404	Double	Non	230	3	10.5	2	60	147	66	2	2	cCSAus
G4404	Double	Non	460	3	5.2	2	60	147	66	2	2	cCSAus
*EI4405	Double	Non	200-230	1	18.0	3	60	136	61	1 or 2	2	CSA
*WDH4405	Double	Auto	200-230	1	18.0	3	60	150	68	--	---	CSA
F4405	Double	Non	230	3	12.2	3	60	147	66	2	2	cCSAus
G4405	Double	Non	460	3	6.1	3	60	147	66	2	2	cCSAus

*CSA approved, all other models are cCSAus approved.
Additional cord lengths are available in 25' (8 m), 35' (11 m) and 50' (15 m).

SELECTION GUIDE

1. For automatic use single piggyback variable level float switch or double piggyback variable level float switch. Refer to FM0477.
2. See FM3459 for correct model of simplex or duplex control panel.

⚠ CAUTION All installation of controls, protection devices and wiring should be done by a qualified licensed electrician. All electrical and safety codes should be followed including the most recent National Electrical Code (NEC) and the Occupational Safety and Health Act (OSHA).

© Copyright 2024 Zoeller® Co. All rights reserved.
502-778-2731 | 800-928-7867 | 3649 Cane Run Road | Louisville, KY 40211-1961 | zoellerpumps.com